2621 STANDING HIP

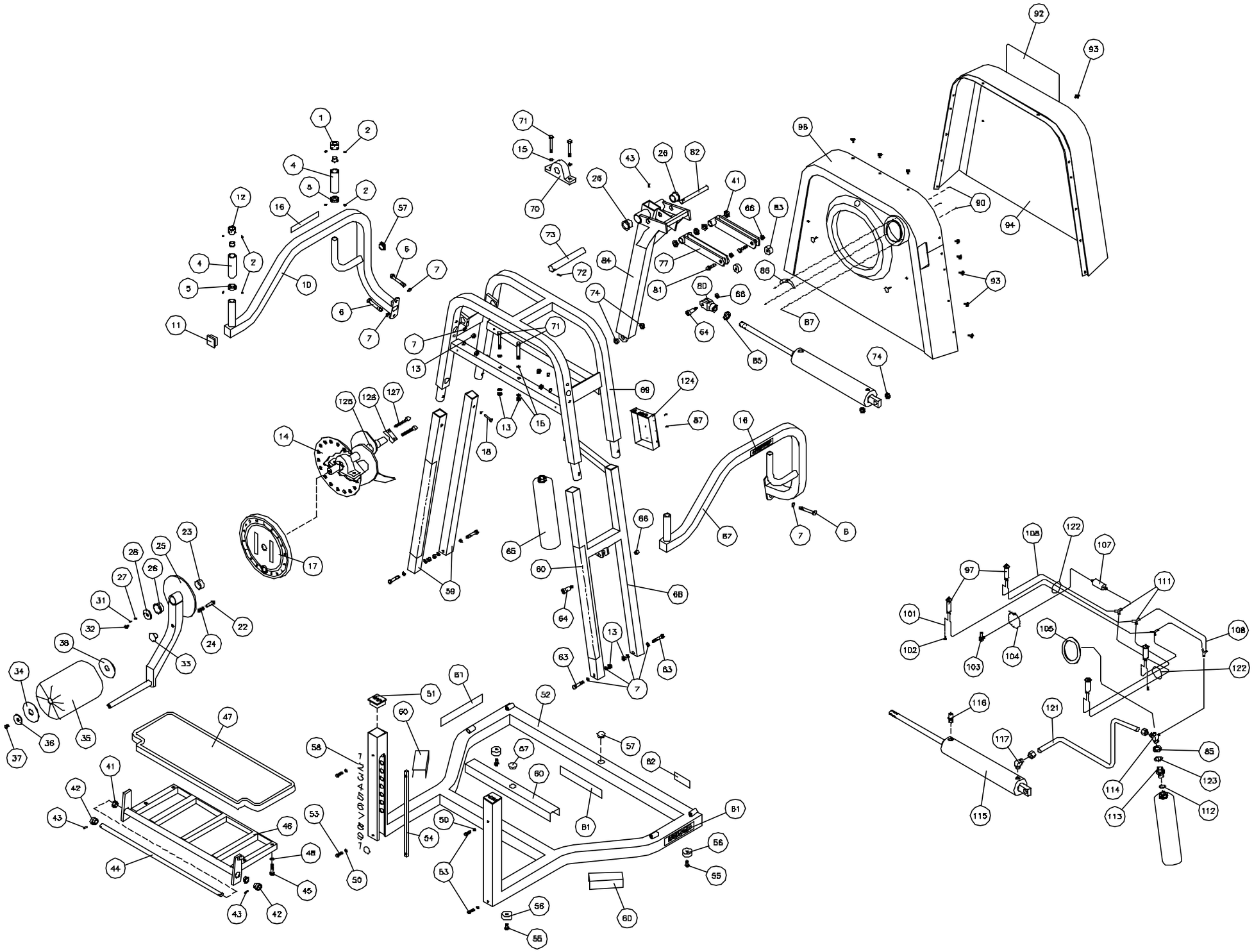

03/13/01
26isoC

AIR 250 STANDING HIP - 2621

ITEM	PART #	DESCRIPTION	
1	115439.70	MINUS CAP	
2	9016.00	SOCKET SCR 8-32 X 1/8	
4	115433.00	GRIP SLEEVE	
5	115022.00	GRIP COLLAR	A
6	9206.00	HHCS 3/8-16 X 2-1/4	ZP
7	9355.00	AIRCRAFT WASHER 3/8	ZP
10	260931.32	LEFT HANDLE BAR	WT
11	135056.00	PLASTIC CAP 1.5" SQUARE	
12	115438.70	PLUS CAP	
13	9228.00	HELN 3/8-16	ZP
14	260957.00	EXERCISE SHAFT PAINTED - WELD	
15	9358.00	SAE FLAT WASHER 3/8	ZP
16	115371.00	DECAL – KEISER , SM	
17	260804.00	ASSY INDEX COVER	
18	9201.00	HHCS 3/8-16 X 1	ZP
22	172180.80	PLUNGER	
23	265054.00	CYL. BEARING	
24	175500.00	SPRING-PLUNGER	
25	260915.33	EXERCISE ARM	BK
26	135050.80	FLANGE BEARING 1" I.D.	
27	265403.00	CAP SCREW SLEEVE	
28	265431.31	LOCKING FENDER WASHER	CR
31	9111.00	SHCS #10-24 X 1/2	ZP
32	265432.00	LOCKING BUTTON HEAD SCREW	
33	175420.00	KNOB	BK
34	265055.00	BEVEL WASHER	
35	110850.00	ROLLER CUSHION	
36	265433.00	FENDER WASHER 3/8	SS
37	9110.00	BHHSCS 3/8-16 X 3/4	SS
38	115055.00	WASHER-UPHOLSTERY ROLLER	
41	115052.80	FLANGE BEARING - .63 I.D.	
42	265423.73	GEAR - STEP	
43	9001.00	SPRING PIN 3/16 X 1/2	ZP
44	262180.73	PIVOT SHAFT - STEP	
45	9177.00	HHCS 5/16-18 X 1-3/4	ZP
46	260912.33	STEP FRAME	BK
47	260861.00	STEP PLATFORM ASSY	
48	9351.00	SAE FLAT WASHER 5/16	ZP
50	9357.00	INT TTH LCK WSHR 1/4	ZP
51	115054.00	PLASTIC CAP 2" SQUARE	
52	260935.32	BASE FRAME	WT
53	9150.00	HHCS 1/4-20 X 1/2	ZP
54	265421.00	RACK - STEP	
55	9279.00	HWH TFTDC 5/16-18 X 3/4	ZP
56	105423.00	BUMPER - MOLDED GLIDE	
57	115404.00	HOLE PLUG 1.0	
58	135306.00	STRIP DECAL #1-10	
59	264163.32	MAIN FRAME TUBE	WT
60	955300.00	4" PROTECTOR STRIP	
61	115372.00	LARGE “KEISER” DECAL	
62	105443.00	DECAL "SERIAL #"	
63	9205.00	HHCS 3/8-16 X 2	ZP
64	9127.00	SHSB 1/2 X 1	ZP
65	255318.33	TANK - 145 CU. IN.	BK

ITEM	PART #	DESCRIPTION	
66	9227.00	HX REV LCK NUT 3/8-16	ZP
67	260932.32	RIGHT HANDLE BAR	WT
68	260937.32	LOWER MAIN FRAME	WT
69	260936.33	MAIN FRAME TOP	BK
70	265502.00	PILLOW BLOCK BRG 1" DIA	
71	9208.00	HHCS 3/8-16 X 2-3/4	ZP
72	9002.00	SPRING PIN 3/16 X 7/8	ZP
73	262201.00	SHAFT 1" X 7.00 LONG	
74	115051.80	FLANGE BEARING- .5 I.D.	
77	260922.33	FOLLOWER ARM	BK
80	115005.00	CLEVIS - 2.5	
81	9204.00	HHCS 3/8-16 X 1-3/4	ZP
82	262182.73	FOLLOWER PIVOT SHAFT	CR
83	145420.00	CAM FOLLOWER	
84	260921.33	LEVER ARM	BK
85	9231.00	HX JAM NUT 3/4-10	ZP
86	125303.00	FLANGE DECAL	
87	9272.00	PHSTS TF PHLPS #6X1/2	BK
90	9984.00	HELN #6-32	ZP
92	265416.20	INSTRUCTIONAL PLACARD	
93	265404.00	PLASTIC RIVET	
94	265066.00	BACK COVER	
96	265067.00	FRONT COVER	
97	110830.00	THUMB BUTTON VALVE	
101	115312.00	1/4 X 1/8 URETHANE TUBE	
102	135057.00	BLACK FLOW RESTRICTOR	
103	110897.00	90 DEG BARBED Q.D.	
104	115429.00	PLASTIC TIE - 10 IN	RED
105	A600803.60	DIGITAL GAGE ASSY	
	B260802.00	100 PSI ANALOG GAGE ASSY	
107	115323.00	IN-LINE FILTER	
108	953108.00	TUBING - 1/4 BLK URETHANE	
111	265310.00	PLASTIC Y	
112	115333.00	ORING .737 X .943 X .103 70 DURO	
113	115000.00	TANK BUSHING	
114	110833.00	3/8-BARBED ELBOW	
115	135316.00	CYLINDER - 2.5 X 12	
116	115318.00	EXHAUST MUFFLER 3/8	
117	8153.00	MALE ELBOW 3/8 X 1/4	
121	953101.00	TUBING - 3/8 BK POLYETHYLENE	
122	115423.00	PLASTIC TIE - 8 inch	BK
123	9364.00	LOCK WASHER 3/4	ZP
124	600801.00	PROCESSOR BOX	
125	260919.33	CAM	
126	261949.00	CLAMP BAR - CAM	
127	9103.00	SCHS 3/8-16 X 1 3/4	ZP